SERIES No: 1000-1	DESCRIPTION G-Guard 1000kg with up to 10m rope	ORIGINAL DRAWING SIZE: 908x645	THIRD ANGLE PROJECTION

DO NOT SCALE

No	DESCRIPTION	PART No	QTY
1	FRONT CASE	907-40	1
2	REAR CASE	907-41	1
3	MAIN SHAFT END PLATE	507-34	1
4	SIGHT GLASS (FALL INDICATOR)		
5	ROPE ASSEMBLY - ROPE		11.1m
6	ROPE ASSEMBLY - ROPE EXIT PLATE		1
7	ROPE ASSEMBLY - RUBBER STOP		1
8	ROPE ASSEMBLY - SHOCK ABSORBER SPRING		1
9	LEFT LABEL	907-83	1
10	RIGHT LABEL	907-84	1
11	IDENTITY LABEL	507-82	1
12	SHACKLE	907-21	1
13	SHACKLE BOLT	907-22	1
14	SHACKLE NUT	907-23	1
15	LOAD BRACKET	907-19	2
16	WARNING LABEL	800-40	1

STANDARD UNITS

1000-1-7G - 7m ROPE LENGTH

1000-1-9G - 9m ROPE LENGTH

ROPE: GALVANIZED STEEL 8mm DIAMETER.

No 4: SIGHT GLASS

FALL INDICATOR LENS SHOWS RED IF A FALL HAS OCCURRED. IF RED SHOWS, REMOVE FROM USE AND RETURN ARRESTER FOR SERVICING.

Top Shackle Bolt Diameter: 16mm

Bottom Shackle Bolt Diameter: 16mm

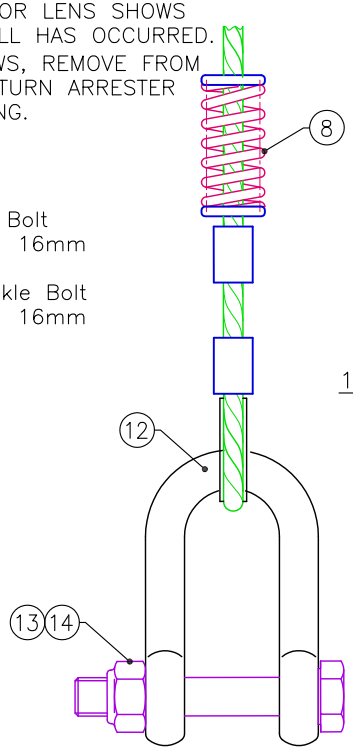

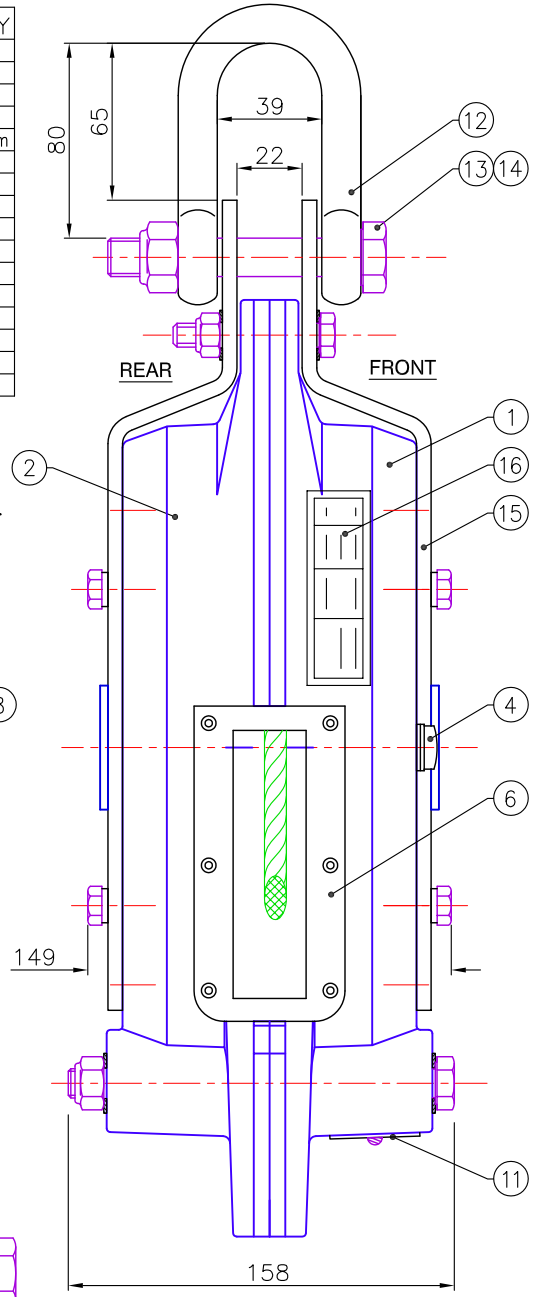

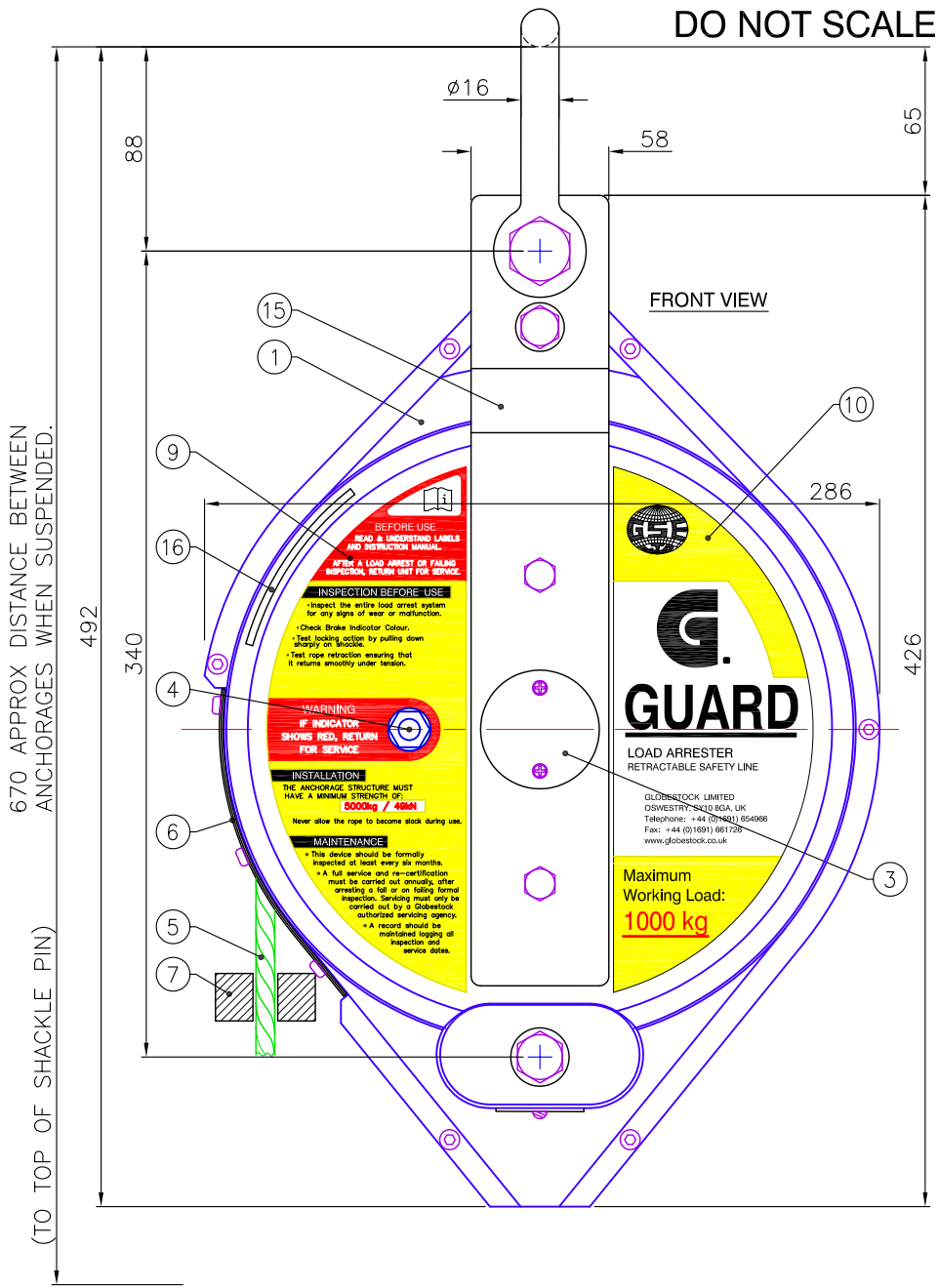

AMENDMENTS					
ISSUE No	001				
DRAWN	DJW				
CHECKED	VL				
DATE	9.5.12				

THIS DRAWING IS ISSUED SUBJECT TO THE CONDITION THAT NO REPRODUCTION THEREOF SHALL BE MADE WITHOUT PERMISSION OF GLOBESTOCK (ENGINEERING) LTD. AND NEITHER THE DRAWING NOR REPRODUCTION THEREOF SHALL BE TRANSFERRED TO A THIRD PARTY WITHOUT SUCH WRITTEN PERMISSION.

GLOBESTOCK (ENGINEERING) LTD

DRAWN	MATERIAL
D.J.W.	/
SCALE	PROTECTIVE TREATMENT
1:1	/

ALL DIMENSIONS ARE IN MILLIMETRES AND APPROXIMATE

GENERAL TOLERANCE: ± / .
ANGLES : ± / .
UNLESS OTHERWISE STATED.

Mile Oak Industrial Estate, Maesbury Road, Oswestry, Shropshire SY10 8GA Telephone: 01691 654966 Fax: 01691 661726